Ship loose items:
NONE

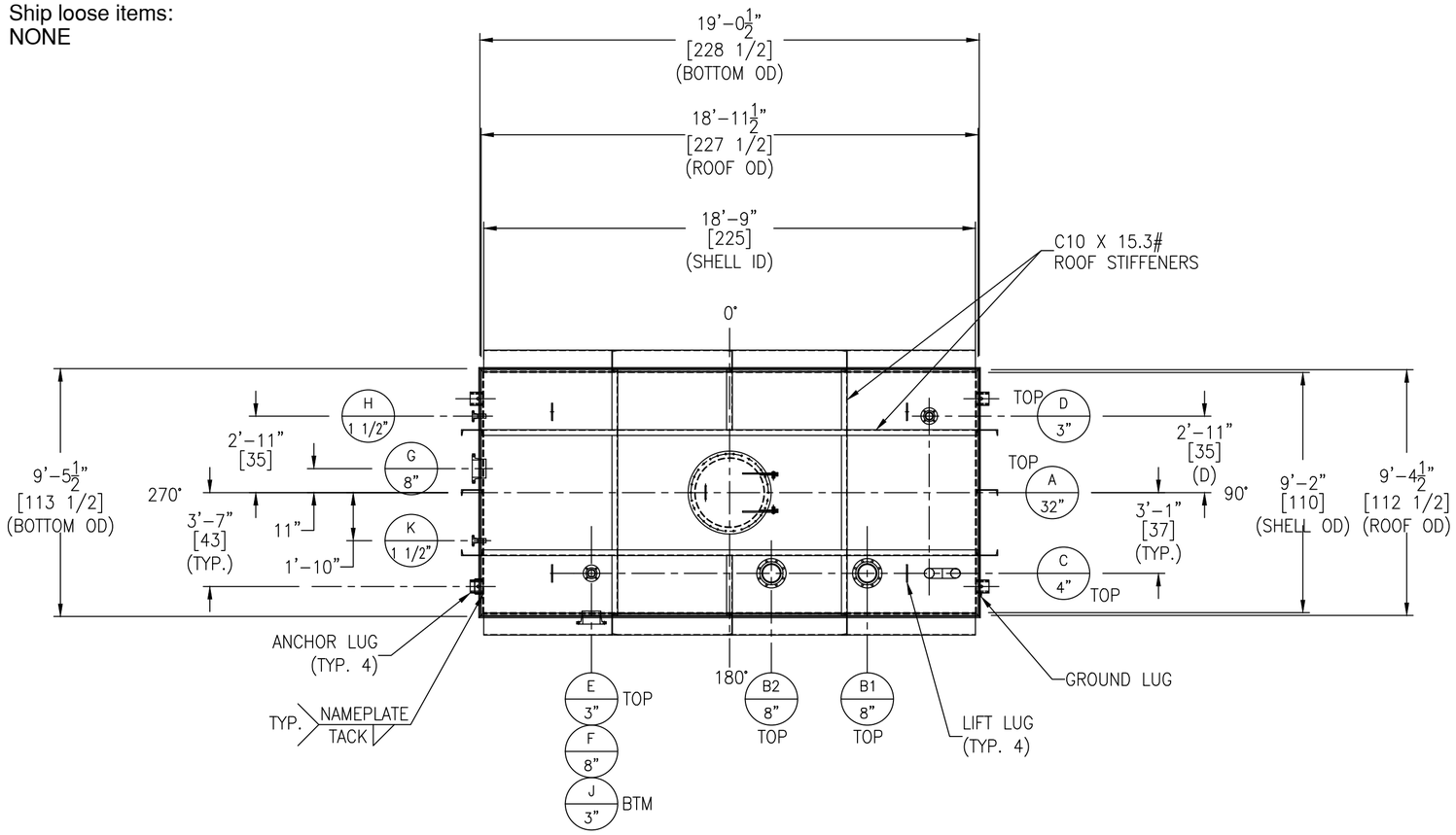

SEE SHEET #3 FOR ROOF STIFFENERS DETAIL
SEE SHEET #4 FOR SHELL STIFFENERS DETAIL

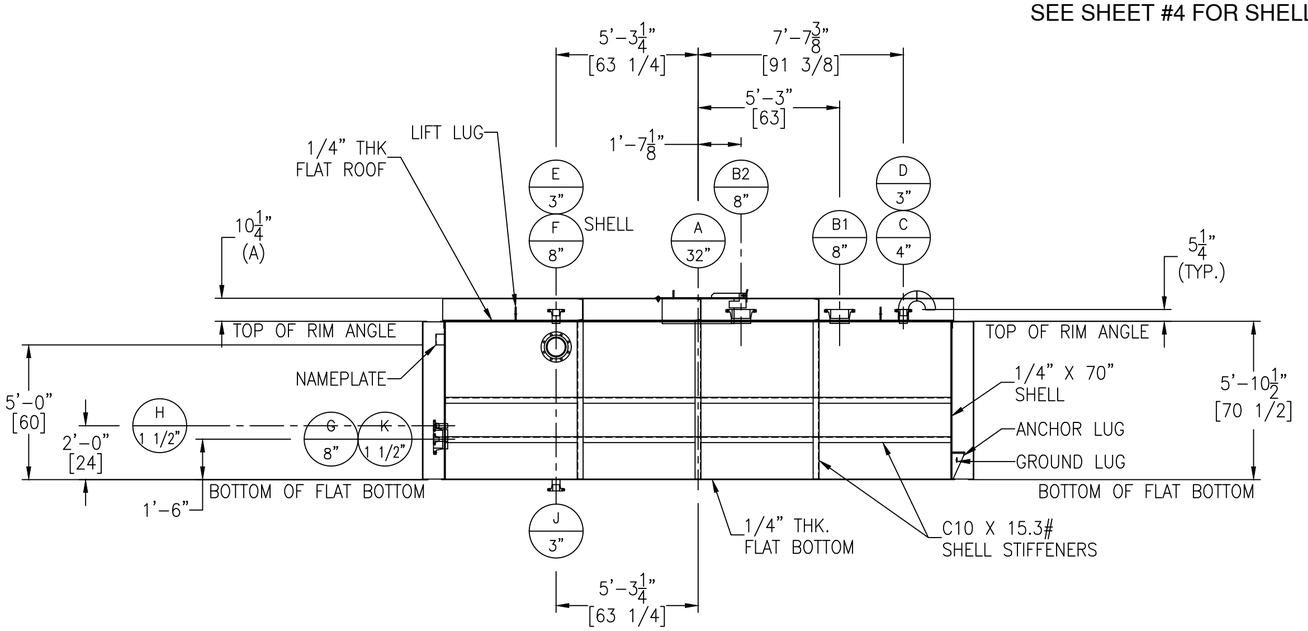

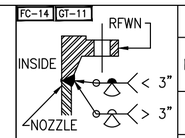

FIGURE NO. 2

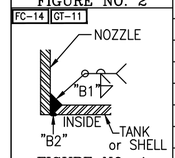

FIGURE NO. 4

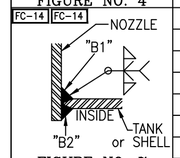

FIGURE NO. 7

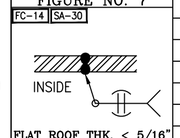

FIGURE NO. 9

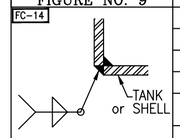

SHELL CORNER WELD
FIGURE NO. 10

NOZZLE SCHEDULE

MARK	SERVICE	SIZE	RATING	TYPE / STYLE	NECK SCHED.	PROJECTION EXT. (℄)	PROJECTION INT. (MIN.)	WELD FIGURE	REPAD SIZE (WIDTH X THK.)	WELD SIZE "A1"	"A2"	"B1"	"B2"	"C1"	"C2"
A	MANWAY	32"	–	API W/ HINGE & HANDLE	1/4"	10"	1"	7	–	–	–	1/4	1/8	–	–
B1	EWR TO T-2721	8"	150#	RFWN	40S	5"	1"	2,7	–	–	–	1/4	1/8	–	–
B2	EWR TO T-2721	8"	150#	RFWN	40S	5"	1"	2,7	–	–	–	1/4	1/8	–	–
C	VENT	4"	–	PIPE W/ ELBOWS	40S	5"	–	4	–	–	–	1/4	1/8	–	–
D	LEVEL TRANSMITTER	3"	150#	RFWN	40S	5"	1"	2,7	–	–	–	1/4	1/8	–	–
E	EWR RECIRCULATION	3"	150#	RFWN	40S	5"	1"	2,7	–	–	–	1/4	1/8	–	–
F	OVERFLOW	8"	150#	RFWN	40S	5"	1"	2,7	–	–	–	1/4	1/8	–	–
G	TO P-2721 A/B/S	8"	150#	RFWN	40S	5"	1"	2,7	–	–	–	1/4	1/8	–	–
H	TEMPERATURE GAUGE	1 1/2"	150#	RFWN	80S	5"	1"	2,7	–	–	–	1/4	1/8	–	–
J	LIQUID DRAIN	3"	150#	RFWN	40S	5"	–	2,4	–	–	–	1/4	1/8	–	–
K	UTILITY CONNECTION	1 1/2"	150#	RFWN	80S	5"	1"	2,7	–	–	–	1/4	1/8	–	–

MATERIALS OF CONSTRUCTION

	VESSEL
SHELL	SA240-304/304L
FLAT ROOF/BTM	SA240-304/304L
RIM ANGLE	SA479-304/304L
NOZZLE NECKS	SA312-304/304L WLD & SA403-304/304L WPW
NOZZLE FLANGES	SA182F-304/304L
MANWAY NECKS	SA240-304/304L
MANWAY FLANGES	SA240-304/304L
GASKETS	GARLOCK 3000
BOLTS/STUDS	SA325 (GALV.)
NUTS	SA325 (GALV.)
REPADS	–
EXTERNAL STIFFENERS	SS304
INTERNAL STIFFENERS	–
LIFTING LUGS	SA240-304/304L
SUPPORTS & HOLDOWNS	SA240-304/304L
GROUND LUG	SA240-304/304L
INSULATION RINGS	–
BAFFLE	–
LADDER	–
TANK CLIPS (LADDER)	–
HANDRAIL	–
HANDRAIL CLIPS	–
PLATFORM	–
PLATFORM CLIPS	–
DIPTUBE SUPPORT	–
JACKET SHELL	–
JACKET HEADS	–
JACKET NOZZLE NECKS	–
JACKET NOZZLE FLANGES	–

DESIGN DATA

	VESSEL
DESIGN AND FAB. CODE	MFG
CERT. STAMP REQ'D.	NO
DESIGN PRESSURE	ATM
DESIGN TEMPERATURE	194° F
MIN. DESIGN METAL TEMP.	-20° F @ ATM
OPERATING PRESSURE	–
OPERATING TEMPERATURE	–
JOINT EFFICIENCY HEADS	0.70
JOINT EFFICIENCY SHELL	0.70
CORROSION ALLOWANCE	0"
SPECIFIC GRAVITY	1.00
EARTHQUAKE ZONE	Ss = (0.373) S1 = (0.169)
WIND LOAD	N/A
STRESS RELIEF	NOT REQ'D
RADIOGRAPHIC EXAM	NOT REQ'D
DYE PENETRANT EXAM	NOT REQ'D
MAGNETIC PARTICLE EXAM	NOT REQ'D
HYDROSTATIC TEST	NOT REQ'D
PNEUMATIC TEST	1.5 PSIG / GAUGE #1
JKT DESIGN AND FAB. CODE	–
JKT CERT. STAMP REQ'D.	–
JKT DESIGN PRESSURE	–
JKT DESIGN TEMPERATURE	–
JKT MIN. DESIGN METAL TEMP.	–
JKT OPERATING PRESSURE	–
JKT OPERATING TEMPERATURE	–
JKT JOINT EFFICIENCY HEADS	–
JKT JOINT EFFICIENCY SHELL	–
JKT HYDRO TEST	–

VESSEL FINISH

INTERIOR WELD TREATMENT:	SAV TANK STANDARD
EXTERIOR WELD TREATMENT:	SAV TANK STANDARD
SAV TANK FINISHING STANDARD:	SEE NOTE 6
INSULATION:	N/A
PAINTING:	N/A

VESSEL CAPACITY AND WEIGHTS

OPERATING CAPACITY	–
FULL CAPACITY	7500 GAL.
EMPTY SHIPPING WEIGHT	11,500 LBS.
WEIGHT FULL OF WATER	74,100 LBS.
WEIGHT FULL OF PRODUCT	74,100 LBS.

QUALITY CONTROL

ENG. _____ DATE: _____

Q.C. _____ DATE: _____

This drawing is issued for customer approval. please review, make approval changes (if any) in red. check the appropriate box, sign & date.

- ☐ Approval – no changes. Please proceed with fabrication.
- ☐ Approved as noted. Please proceed with fabrication
- ☐ Not approved. Please make changes and resubmit.

Customer signature _____ Date _____

GENERAL NOTES

1.) COVER ALL FLANGES, OPENINGS & MACHINED SURFACES PRIOR TO SHIPMENT UNLESS OTHERWISE NOTED.
2.) BOLT HOLES TO STRADDLE 0° & 180° UNLESS OTHERWISE NOTED.
3.) REPADS TO HAVE (1) ø1/4" NPT TELL-TALE HOLES FOR PNEUMATIC TESTING AT 2 PSIG FOR PRESSURE RETAINING PARTS. ALL OTHER REPADS TO HAVE (1) ø1/4" WEEP HOLE AT LOWEST POINT ON PAD.
4.) MANUFACTURING TOLERANCE TO BE IN ACCORDANCE WITH API STANDARD 650 7.5.
5.) ASME MATERIALS TO CONFORM TO THE FOLLOWING: FLANGES – B16.5, FITTINGS – B16.9 & COUPLINGS – B16.11.
6.) PICKLE ALL EXTERIOR WELDS. PASSIVATE INTERIOR & EXTERIOR OF VESSEL.

REVISIONS

REV	D.BY	C.BY	DATE	DESCRIPTION
				AS BUILT
2	AD	–	8/9/24	CERTIFIED
1	MM	RS	6/20/24	APPROVAL REV 1
0	MM	AD	4/19/24	APPROVAL

Savannah Tank & Equipment Corp.
1517 Telfair Road, Savannah, GA 31415
(912) 233-8902

DRAWN BY: MM
CHK'D BY: AD
APPROVED BY: NP
SCALE: 3/16" = 1'-0"

BERNHARD MCC, LLC.
EJECTOR WATER STORAGE TANK
EQUIP. #T-3721
CUST. PO #24100783 OP

DRAWING NO.: 014-24-1 SHT 1 OF 5 REV. SET 2